B NLC D OF LI S

Light management systems

Product family features

- With/without Daylight and Occupancy Sensor D4i Module
- Bluetooth NLC enabled by Silvair
- Control of D4i drivers or DALI drivers with additional DALI bus power supply
- Intended for installation into a standard ½" knockout
- Works with Inventronics Hubsense®
- Works with Inventronics D4i LED drivers

Product family benefits

- Standard communication protocol released by Bluetooth SIG
- Design freedom due to compact size
- Easy to integrate in luminaire
- Minimize internal wiring in combination with D4i drivers
- Secured product communication granted by ioXT and PSA Certificates

© 2026,Inventronics. All rights reserved.

Areas of application

- Open offices
- Individual offices
- Conference rooms
- Classrooms
- Storage and break areas
- Stairways
- Toilets
- Suitable for high installation heights
- Entrance halls
- High-bay warehouse
- Production halls

© 2026,Inventronics. All rights reserved.

Technical data

Electrical data

Wireless protocol	Bluetooth NLC enabled by Silvair
Wireless range	20 m line of sight
Nominal voltage	13,5 … 22,5 V
Mains frequency	0 Hz
Radio frequency	2.4 GHz
Average input current	10 mA
Input voltage DC	12…22.5 V
Peak input current	30 mA
System wattage	0.30 W
Required DALI current (typical)	10 mA
Maximum TX power	+8 dBm
Standby power	< 150 mW

© 2026,Inventronics. All rights reserved.

Dimensions & weight

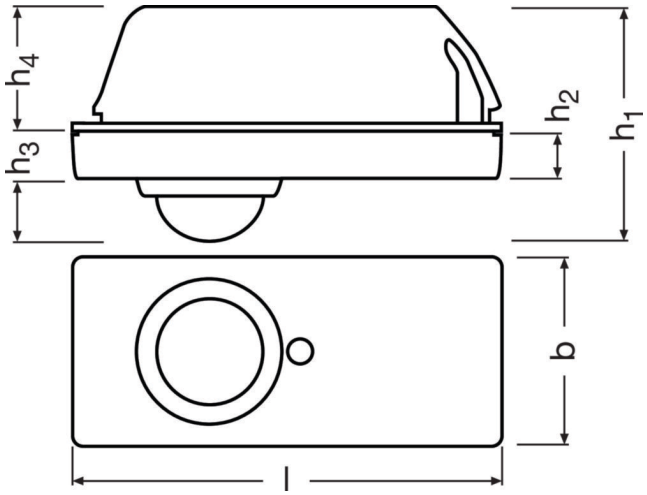

Product weight	13.50 g
Maximum allowed cable length	10
Length	50.0 mm
Wire preparation length, input side	7…9 mm
Mounting hole diameter	17.0...44.0 mm
Screw thread length	25 mm
Cable cross-section, input side	0.25…0.75 mm²
Height	27.5 mm
Width	22.0 mm

Temperatures & operating conditions

Maximum temperature at tc test point	60 °C
Permitted relative humidity at storage	0…95 %
Temperature range at storage	0...70 °C
Ambient temperature range	-20…+50 °C
Permitted rel. humidity during operation	0…90 %

© 2026,Inventronics. All rights reserved.

Lifespan

Lifespan	50000 h

Capabilities

Detection angle	360 °
Type of installation	Luminaire integration
Number of connected drivers	4
Status Indicator	Blue: network Status / Red: Motion detected
Control interface	Bluetooth NLC
Dimming interface	D4i
Control output	D4i
Reset	Magnetic [1)]
Compatibility	Works with Inventronics HubSense / Works with Inventronics DEXAL
Detection angle (PIR)	+/-90°
Operating range, light sensor	<1000 lx
Dimmable	Yes
Detection area	8 m²
Detection angle (Light sensor)	+/- 20°
Type of sensor	Daylight / PIR

1) by magnet

© 2026,Inventronics. All rights reserved.

Certificates & standards

Protection class	II
Approval marks – approval	CE / D4i / ioXT / PSA
Type of protection	IP65

Environmental information

Information according Art. 33 of EU Regulation (EC) 1907/2006 (REACh)	
SCIP_STATUS	In work
Primary Article Identifier	6977078997041
Declaration No. in SCIP database	In work
Date of Declaration	17-04-2026
SCIP_ID	

© 2026,Inventronics. All rights reserved.

Download Data

File		
CAD data 2-dim	Compressed	►B NLC D OF LI S CAD2PDF 291025
CAD data 3-dim	Compressed	►B NLC D OF LI S CAD3PDF 291025
CAD data	Compressed	►B NLC D OF LI S IGS 291025
CAD data	Compressed	►B NLC D OF LI S STEP 291025
User instruction	PDF	►G15129351_B-NLC-D-OF-LI__B-NLC-D-LI-R__B-NLC-D-OF-LI-S_07

© 2026,Inventronics. All rights reserved.

Logistical Data

Product code	Product description	Packaging unit (Pieces/Unit)	Dimensions (length x width x height)	Volume	Gross weight
6977078997041 INVENTRONICS	B NLC D OF LI S	Shipping carton box 50 Pieces	380 x 215 x 130 mm	10.62 dm³	19.42 g

The mentioned product code describes the smallest quantity unit which can be ordered. One shipping unit can contain one or more single products. When placing an order, for the quantity please enter single or multiples of a shipping unit

Disclaimer

Subject to change without notice. Errors and omission excepted. Always make sure to use the most recent release.

© 2026,Inventronics. All rights reserved.